US 20160101326A1

(19) United States

(12) Patent Application Publication

OU

(10) Pub. No.: US 2016/0101326 A1

(43) Pub. Date: Apr. 14, 2016

(54) **SPORTSBALL WITH WEIGHT CONTROL ARRANGEMENT**

(71) Applicant: **Tsung Ming OU**, Kaohsiung (TW)

(72) Inventor: **Tsung Ming OU**, Kaohsiung (TW)

(21) Appl. No.: **14/510,095**

(22) Filed: **Oct. 8, 2014**

Publication Classification

(51) **Int. Cl.**

A63B 41/02	(2006.01)
A63B 45/00	(2006.01)
A63B 41/08	(2006.01)

(52) **U.S. Cl.**

CPC ***A63B 41/02*** (2013.01); ***A63B 41/08*** (2013.01); ***A63B 45/00*** (2013.01)

(57) **ABSTRACT**

A sportsball includes a ball cover having a spherical ball cavity, an inflatable ball bladder disposed in the ball cavity of the ball cover; and a weight control arrangement which includes a plurality of weight panels. The weight panels are made of the same material of the ball bladder and are attached to the ball bladder for not only controlling a weight of the ball bladder but also strengthening the ball bladder to support the ball cover after the ball bladder is inflated.

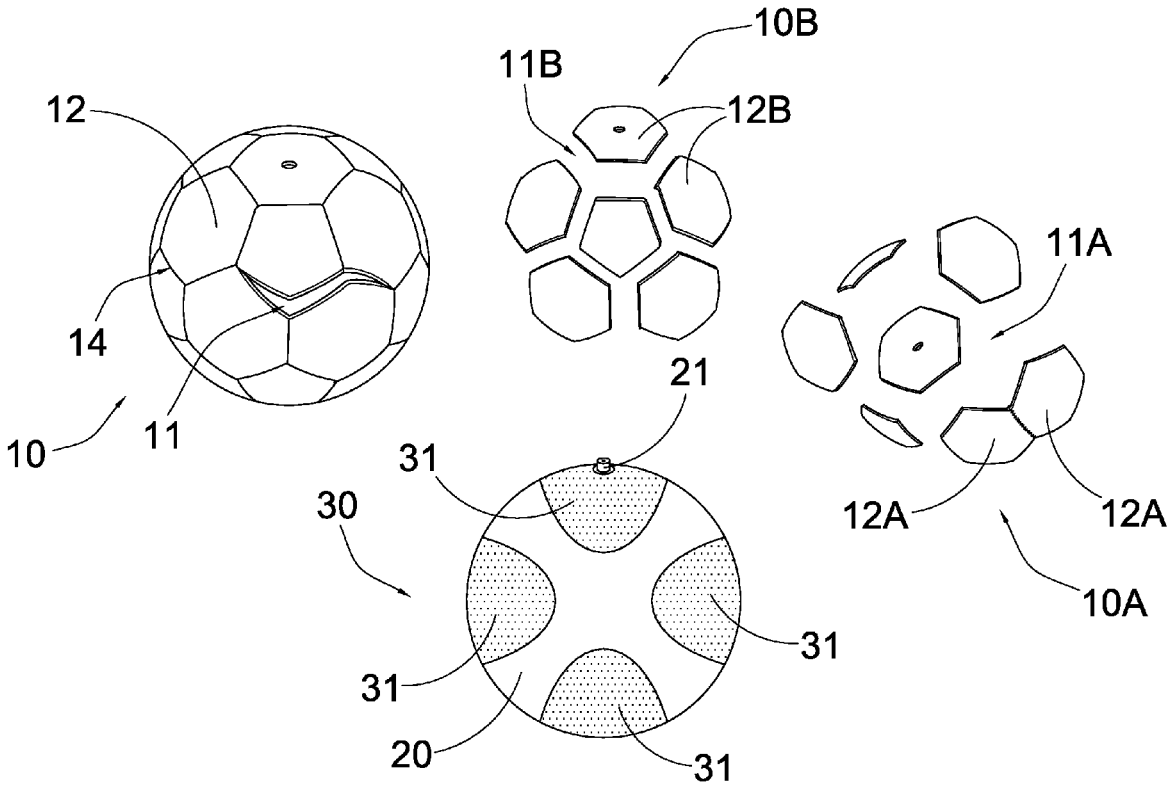

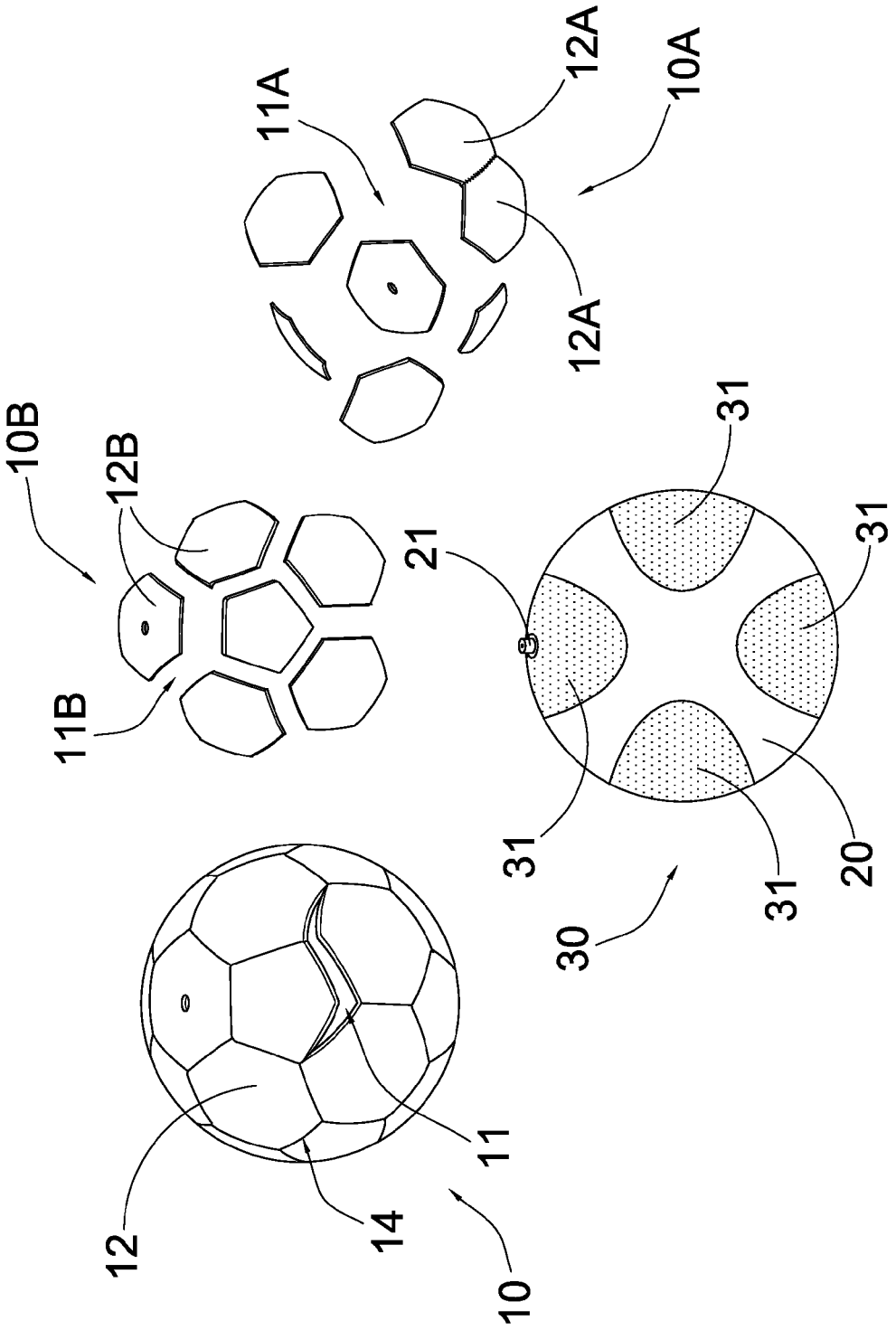

FIG.1

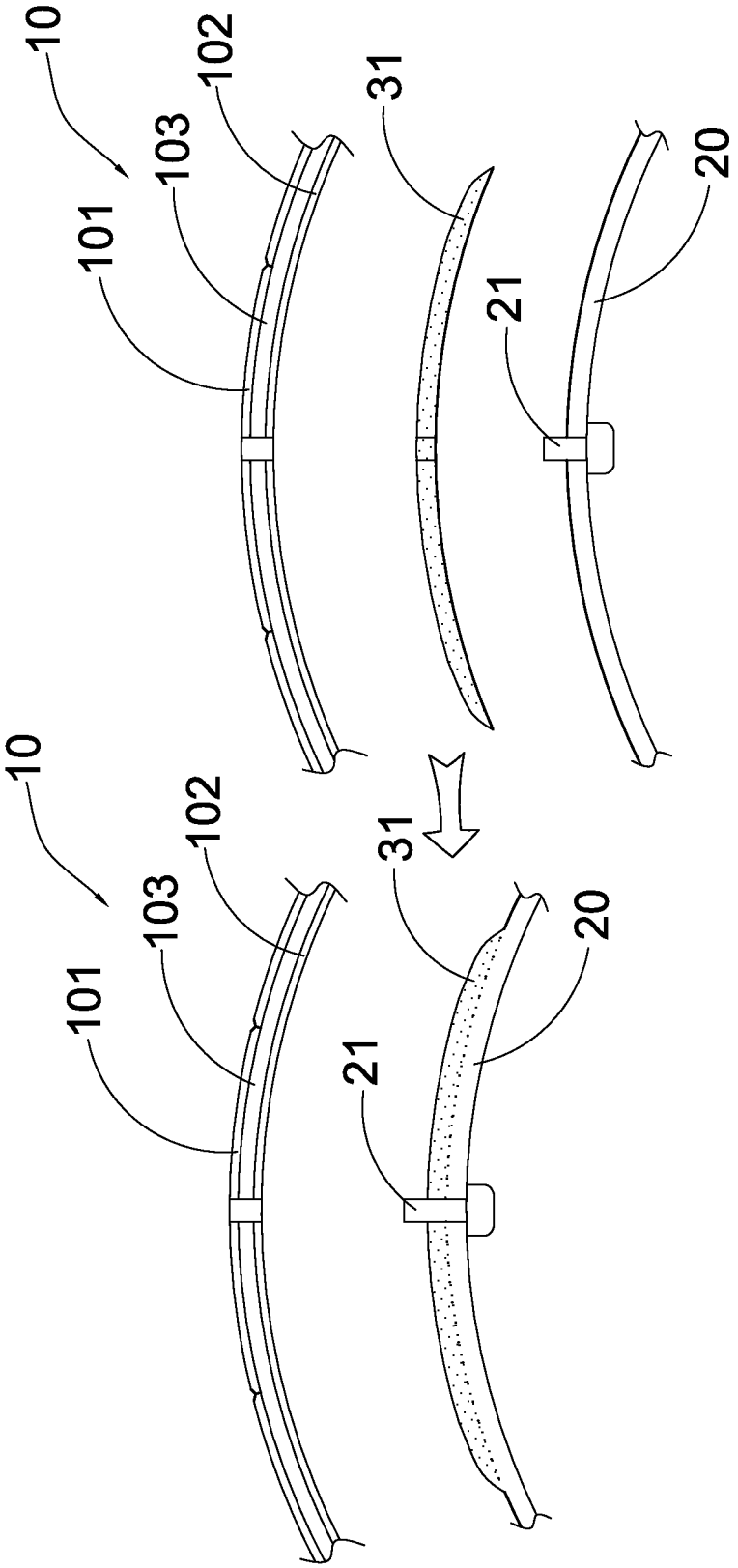

FIG.2

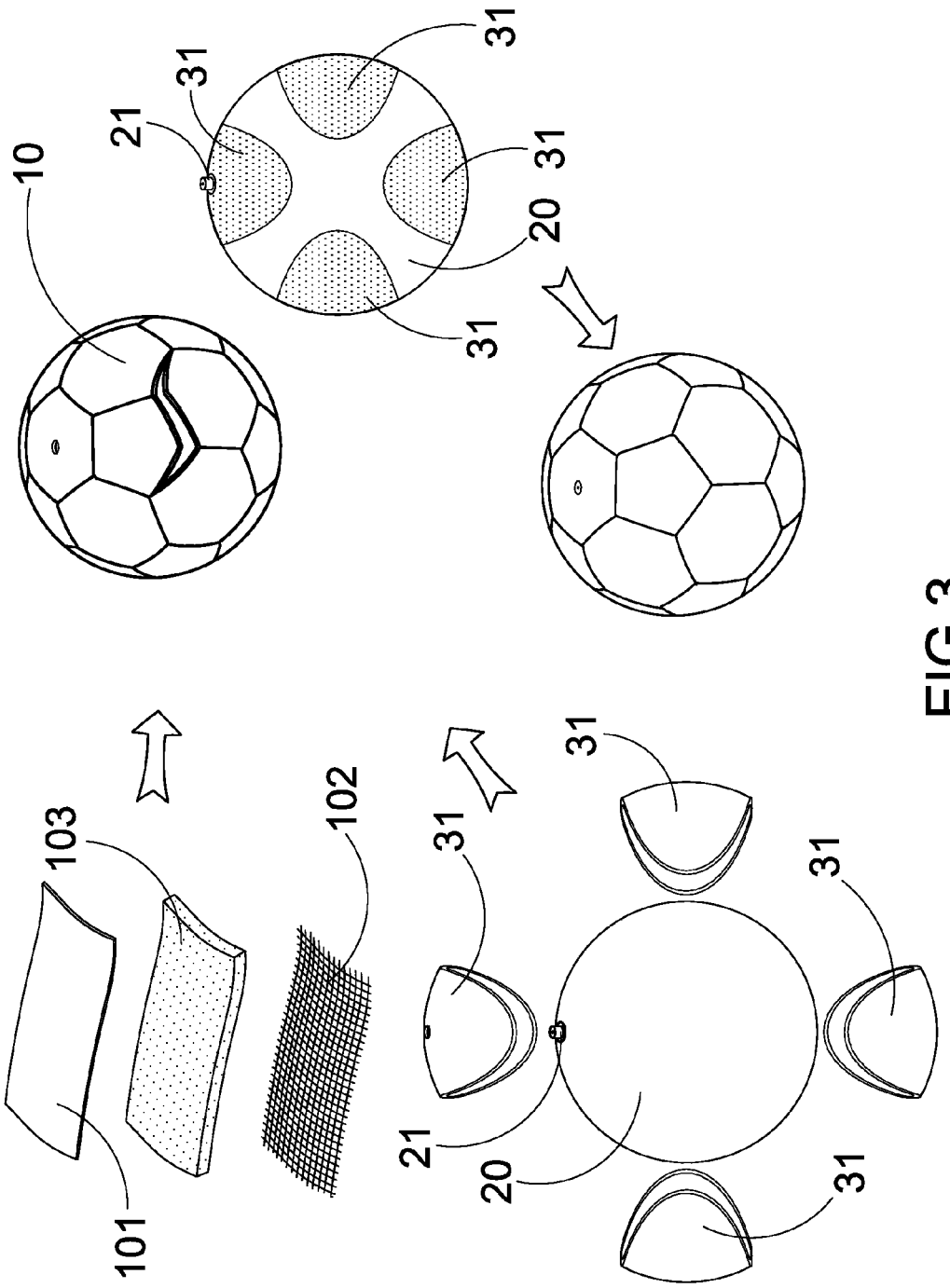

FIG.3

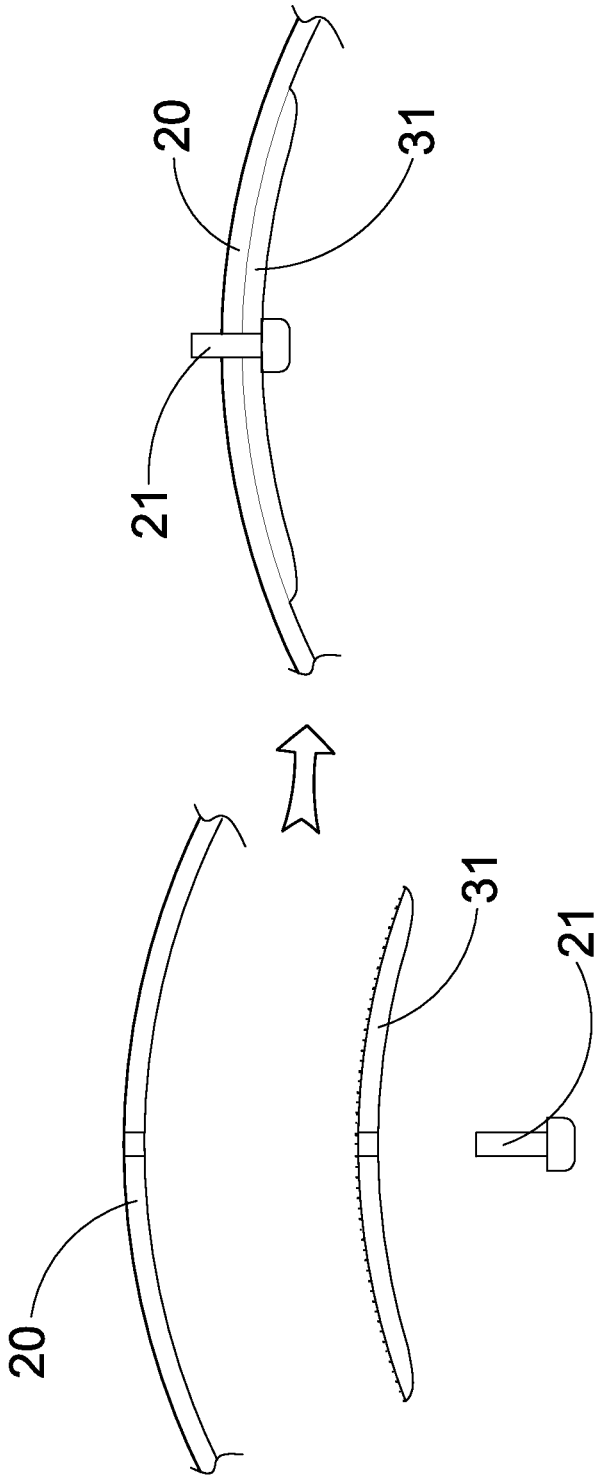

FIG.4

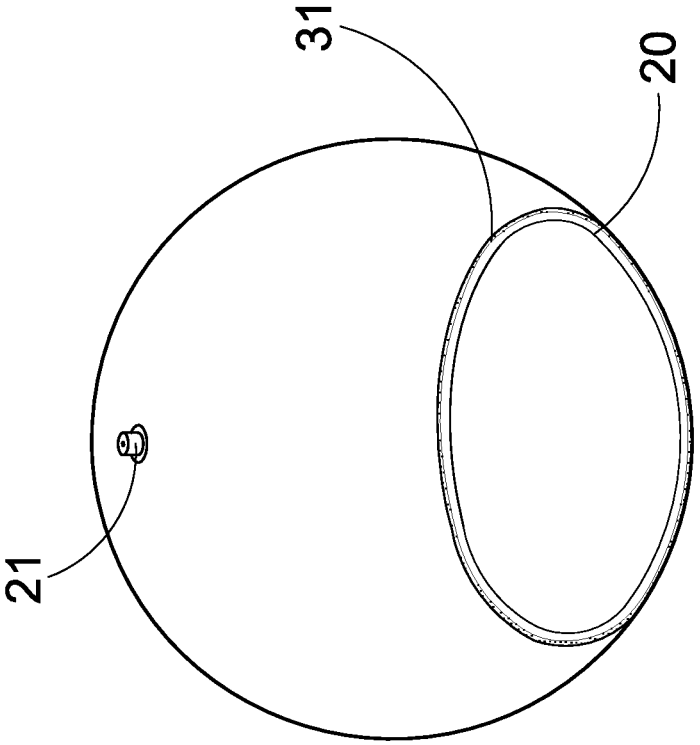

FIG.5

SPORTSBALL WITH WEIGHT CONTROL ARRANGEMENT

NOTICE OF COPYRIGHT

[0001] A portion of the disclosure of this patent document contains material which is subject to copyright protection. The copyright owner has no objection to any reproduction by anyone of the patent disclosure, as it appears in the United States Patent and Trademark Office patent files or records, but otherwise reserves all copyright rights whatsoever.

BACKGROUND OF THE PRESENT INVENTION

[0002] 1. Field of Invention

[0003] The present invention relates a sportsball, and more particular to a sportsball with a weight control arrangement not only ensuring the weight of the sportsball to meet a specify requirement but also enhancing the strength of the ball bladder.

[0004] 2. Description of Related Arts

[0005] A conventional sportsball, such as a conventional soccer ball, generally comprises a ball bladder, an inner lining, and a ball casing. The ball casing comprises a plurality of casing panels attached on the ball bladder, wherein each of the casing panels is usually stitched to adjacent casing panels for forming a sportsball. For professional use, all the sportsballs have to be passed a particular standard. For example, the soccer balls must be passed either the "FIFA standard" or the "International Matchball Standard". There are six individual tests for the soccer ball including circumference test, sphericity test, rebound test, water absorption test, weight, loss of pressure test, and shape and size retention test. For a size 5 of a soccer ball, the weight thereof must be within a range between 420 g and 450 g.

[0006] Accordingly, in order to enhance the strength of the sportsball, some ball manufacturers will use double inner linings to strengthen the lining structure of the sportsball. Preferably, the double inner lining structure includes two woven fabric layers overlapped and attached with each other, wherein the two woven fabric layers are then attached to the inner surface of the casing panel. Since the weight of the double inner lining structure increases, the weight of other components, such as the ball bladder and/or the ball casing, must be correspondingly reduced. In other words, only the inner lining structure of the sportsball is enhanced while the strength of other components will be weakened. Furthermore, the manufacturing process of the sportsball will be complicated to involve the double inner lining structure to ensure the two woven fabric layers to be securely attached to the inner surface of the casing panel. More importantly, the double inner lining structure will affect the inflation of the ball bladder and the roundness of the sportsball after the ball bladder is inflation.

[0007] Some ball manufacturers will use double ball pocket structure to strengthen the inner structure of the sportsball. Accordingly, an inner inflatable ball bladder is disposed within an outer non-stretchable ball pocket to form the double ball pocket structure, wherein the inner ball bladder is inflated within the outer ball pocket to support the ball casing. The major drawback of the double ball pocket structure is that the outer ball pocket will limit the fully inflation of the inner ball bladder. As a result, the sportsball may be not formed in a true roundness manner. Furthermore, the double ball pocket structure will affect the rebound of the sportsball.

SUMMARY OF THE PRESENT INVENTION

[0008] The invention is advantageous in that it provides a sportsball with a weight control arrangement not only ensuring the weight of the sportsball to meet a specify requirement but also enhancing the strength of the ball bladder.

[0009] Another advantage of the invention is to provide a sportsball, wherein a plurality of weight panels are made of the same material of the ball bladder to strengthen the ball bladder so as to prevent the ball bladder being over-inflated to damage the ball bladder.

[0010] Another advantage of the invention is to provide a sportsball, wherein the weight of the sportsball can be selectively adjusted by the numbers of weight panels or by the thickness of the weight panels.

[0011] Another advantage of the invention is to provide a sportsball, wherein the weight panels are symmetrically attached to the ball bladder to ensure the ball bladder to be inflated evenly.

[0012] Another advantage of the invention is to provide a sportsball, wherein the weight panels can be integrally formed at the outer surface of the ball bladder or can be adhered to the inner surface of the ball bladder to strengthen the ball bladder. The weight panels can also be formed as an outer bladder to integrally form at the outer surface of the ball bladder.

[0013] Another advantage of the invention is to provide a sportsball, wherein the valve stem is also supported by one of the weight panels to secure its position at the ball bladder.

[0014] Another advantage of the invention is to provide a sportsball, wherein a single inner lining is formed at the inner surface of the ball cover to reduce the weight of the sportsball. In particular, the inner lining is knitted to have the same tension at longitudinal and transverse directions to enhance the strength of the ball cover.

[0015] Another advantage of the invention is to provide a sportsball, wherein the manufacturing process of the sportsball is simplified by simply disposing the ball bladder with the weight panels in the ball cover, so as to reduce the time-consuming manufacturing procedure of the sportsball while being cost effective.

[0016] Another advantage of the invention is to provide a sportsball, which can significantly increase the productivity along with the production quality consistency.

[0017] Another advantage of the invention is to provide a sportsball, which does not require to alter the original structural design of the sportsball, so as to minimize the manufacturing cost of the sportsball incorporating with the weight control arrangement.

[0018] Another advantage of the invention is to provide a sportsball, wherein the weight control arrangement can incorporate with both conventional stitching type sportsball and conventional adhering type sportsball. Therefore, the sportsball can be mass-produced and can be incorporated with the weight control arrangement to form the stitching type sportsball, the stitch-less type sportsball or adhering type sportsball.

[0019] Another advantage of the invention is to provide a sportsball, wherein the sportsball can be manufactured into a wide variety of ball types, so as to facilitate widespread applications of the present invention. For example, by using the structural configuration of the weight control arrangement, the sportsball having a ball bladder can be manufactured as a soccer ball, an America football, or even a volley ball.

[0020] Another advantage of the invention is to provide a sportsball, wherein no expensive or complicated structure is

required to employ in the present invention in order to achieve the above mentioned objects. Therefore, the present invention successfully provides an economic and efficient solution for controlling the weight of the sportsball and for strengthening the ball bladder.

[0021] Additional advantages and features of the invention will become apparent from the description which follows, and may be realized by means of the instrumentalities and combinations particular point out in the appended claims.

[0022] According to the present invention, the foregoing and other objects and advantages are attained by a sportsball, comprising:

[0023] a ball cover having a spherical ball cavity;

[0024] an inflatable ball bladder disposed in the ball cavity of the ball cover, wherein the ball bladder has a valve stem formed thereat for inflating the ball bladder; and

[0025] a weight control arrangement, comprising a plurality of weight panels which are made of the same material of the ball bladder and are attached to the ball bladder for not only controlling a weight of the ball bladder but also strengthening the ball bladder to support the ball cover after the ball bladder is inflated.

[0026] In accordance with another aspect of the invention, the present invention comprises a method of manufacturing a sportsball, comprising the following steps.

[0027] (A) Form a ball cover having a spherical ball cavity.

[0028] (B) Form an inflatable ball bladder which has a valve stem formed thereat.

[0029] (C) Form a plurality of weight panels which are made of the same material of the ball bladder.

[0030] (D) Symmetrically attach the weight panels to the ball bladder for not only controlling a weight of the ball bladder but also strengthening the ball bladder to prevent the ball cover being over-inflated.

[0031] (E) Dispose the ball bladder with the weight panels in the ball cavity of the ball cover to support the ball cover after the ball bladder is inflated.

[0032] Still further objects and advantages will become apparent from a consideration of the ensuing description and drawings.

[0033] These and other objectives, features, and advantages of the present invention will become apparent from the following detailed description, the accompanying drawings, and the appended claims.

BRIEF DESCRIPTION OF THE DRAWINGS

[0034] FIG. **1** is an exploded perspective view of a sportsball with a weight control arrangement according to a preferred embodiment of the present invention.

[0035] FIG. **2** is a sectional view of the ball bladder with the weight control arrangement according to the above preferred embodiment of the present invention.

[0036] FIG. **3** is a flow diagram illustrating the manufacturing process of the sportsball according to the above preferred embodiment of the present invention.

[0037] FIG. **4** illustrates a first alternative mode of the weight control arrangement according to the above preferred embodiment of the present invention, illustrating the weight panels adhered to the inner surface of the ball bladder.

[0038] FIG. **5** illustrates a second alternative mode of the weight control arrangement according to the above preferred embodiment of the present invention, illustrating the weight panels formed an outer bladder to be attached to the outer surface of the ball bladder.

DETAILED DESCRIPTION OF THE PREFERRED EMBODIMENT

[0039] The following description is disclosed to enable any person skilled in the art to make and use the present invention. Preferred embodiments are provided in the following description only as examples and modifications will be apparent to those skilled in the art. The general principles defined in the following description would be applied to other embodiments, alternatives, modifications, equivalents, and applications without departing from the spirit and scope of the present invention.

[0040] Referring to FIG. **1** of the drawings, a sportsball according to a preferred embodiment of the present invention, wherein the sportsball can be soccer ball, America football, or a volley ball. Accordingly, the sportsball is shown as a soccer ball as an example. According to the preferred embodiment, the sportsball comprises a ball cover **10**, an inflatable ball bladder **20**, and a weight control arrangement **30**.

[0041] Accordingly, the ball cover **10** has a spherical ball cavity **11**, wherein the ball bladder **20** is disposed in the ball cavity **11** of the ball cover. The ball cover **10** can be a stitch-less type ball cover, a stitching type ball cover, or an adhering type ball cover.

[0042] For the stitch-less type ball cover, the ball cover **10** comprises a one piece integrated cover body **12** having an opening and defining the ball cavity **11** within the cover body **12**, wherein a plurality of channels **14** are indently formed on the outer surface of the cover body **12**. After the ball bladder **20** is disposed in the ball cavity **11** through the opening, the opening of the cover body **12** is sealed to enclose the ball bladder **20** within the ball cover **10**.

[0043] For the stitch-less type ball cover, the ball cover **10**A comprises a plurality of cover panels **12**A attached with each other edge-to-edge by stitching to define the ball cavity **11**A. Accordingly, one of the cover panels **12**A is unattached to define the opening of the ball cover **10**A, such that after the ball bladder **20** disposed in the ball cavity **11**A through the opening, the opening of the ball cover **10**A is sealed by stitching to enclose the ball bladder **20** within the ball cover **10**A.

[0044] For the adhering type ball cover, the ball cover **10**B comprises a plurality of cover panels **12**B attached with each other edge-to-edge by adhesive to define the ball cavity **11**B. In particular, the cover panels **12**B can be adhered on the ball bladder **20** to align the cover panels **12**B edge-to-edge.

[0045] As shown in FIGS. **2** and **3**, the ball cover **10** comprises an outer cover panel **101**, a single inner lining **102**, and a cushioning layer **103** integrally bonded between the outer cover panel **101** and the inner lining **102**. The outer cover panel **101** is made of durable material such as leather, Thermoplastic Urethane (TPU), Polyurethane (PU), Polyvinyl Chloride (PVC), Thermoplastic Elastomer (TPE), Ethylene-Vinyl Acetate (EVA), rubber, or other durable fabrics.

[0046] Accordingly, only one inner lining **102** is used in the ball cover **10** to reduce the weight of the ball cover **10**. It is worth mentioning that the inner lining **102** is a fabric layer, such as a woven fabric layer, knitted to have the same tension at longitudinal and transverse directions, so as to enhance the strength of the ball cover **10**. Conventionally, two fabric layers are used that one of the fabric layers has a strong tension

at the longitudinal direction while another fabric layer has a strong tension at the transverse direction. Therefore, two fabric layers must be used to ensure the tensions at the longitudinal and transverse directions are the same to enhance the strength of the ball. In view of the present invention, since the inner lining **102** is knitted to have the same strong tensions at the longitudinal and transverse directions, the ball cover **10** requires one single inner lining **102** to ensure the strength of the ball cover **10** especially when the ball bladder **20** is inflated.

[0047] The ball bladder **20**, having a stem valve **21**, is disposed in the ball cavity **11** of the ball cover **10** through the opening thereof for propping up the ball cover **10** after inflation. Preferably, the ball bladder **20** is made of rubber for being popped by air inflation via the valve stem **21**.

[0048] The weight control arrangement **30** comprises a plurality of weight panels **31** which are made of the same material of the ball bladder **20** and are attached to the ball bladder **20** for not only controlling a weight of the ball bladder **20** but also strengthening the ball bladder **20** to support the ball cover **10** after the ball bladder **20** is inflated. The weight panels **31** further prevent the ball bladder **20** from being over-inflated.

[0049] Each of the weight panels **31** has an elliptical shape and has a uniform thickness. In addition, the thickness of each of the weight panel is equal or smaller than a thickness of the ball bladder **20**. In particular, the weight panels **31** are symmetrically attached to the ball bladder **20** to ensure the ball bladder **20** to be inflated evenly. Preferably, four weight panels **31** are spacedly attached to the ball bladder **20**. It is worth mentioning that the valve stem **21** is extended through one of the weight panels **31** to secure the valve stem **21** in position. When the weight panels **31** are attached to the ball bladder **20**, the overall thickness of the weight panel **31** and the ball bladder **20** will be substantially increased. Therefore, the stem valve **21** can be securely supported at the ball bladder **20**.

[0050] As shown in FIGS. **2** and **3**, the weight panels **31** are integrally bonded on an outer surface of the ball bladder **20**. Since the weight panels **31** and the ball bladder **20** are made of the same material, the weight panels **31** can be easily boned on the ball bladder **20** to form a one piece integrated bladder. Preferably, the thickness of the weight panel **31** is the same thickness of the ball bladder **20**.

[0051] Alternatively, the weight panels **31** are adhered to an inner surface of the ball bladder **20**, as shown in FIG. **4**. Accordingly, the weight panels **31** can be boned to the inner surface of the ball bladder **20** by adhesive before the ball bladder **20** is entirely formed and sealed for inflation. Preferably, the thickness of the weight panel **31** is the same thickness of the ball bladder **20**.

[0052] FIG. **5** illustrates a second alternative mode of the weight panel **31**, wherein the weight panels **31** are integrally formed edge-to-edge to form an outer bladder which is integrally bonded to the outer surface of the ball bladder **20**. Preferably, the weight panel **31** is thinner than the ball bladder **20**.

[0053] Accordingly, the present invention further provides a method of manufacturing a sportsball, comprising the following steps.

[0054] (1) Form the ball cover **10** having the spherical ball cavity **11**. The ball cover **10** is constructed to have a three-layered structure by integrally bonding the cushioning layer **103** between the outer cover panel **101** and the inner lining **102**. In particular, the ball cover **10** can be formed as the stitch-less type ball cover, the stitching type ball cover, or the adhering type ball cover.

[0055] (2) Form the inflatable ball bladder **20** which has the valve stem **21** formed thereat. Preferably, the valve stem **21** is integrally bonded to the ball bladder **20**.

[0056] (3) Form a plurality of weight panels **31** which are made of the same material of the ball bladder **20**. Depending on the overall weight of the sportsball, the number of weight panels **31** and the thickness of each of the weight panels **31** can be selectively adjusted to fulfill the specify weight requirement of the sportsball.

[0057] (4) Symmetrically attach the weight panels **31** to the ball bladder **20** for not only controlling a weight of the ball bladder **20** but also strengthening the ball bladder **20** to prevent the ball cover being over-inflated. The weight panels **31** will substantially increase the overall thickness of the ball bladder **20** to enhance the strength thereof so as to substantially support the ball cover **10** after the ball bladder **20** is inflated. Accordingly, in the step (4), the weight panels **31** can be integrally bonded to the outer surface of the ball bladder **20** after the ball bladder **20** is formed, can be adhered to the inner surface of the bladder **20** before the ball bladder **20** is formed, or can be integrally formed edge-to-edge to form an outer bladder to integrally bond to the outer surface of the ball bladder **20** after the ball bladder **20** is formed.

[0058] (5) Dispose the ball bladder **20** with the weight panels **31** in the ball cavity **11** of the ball cover **10** to support the ball cover **10** after the ball bladder **20** is inflated.

[0059] According to the preferred embodiment, two different strength enhancements are configured to control the weight of the sportsball and to enhance the strength of the sportsball. The inner lining **102** with the same strong tensions at the longitudinal and transverse directions is used for enhancing the strength of the ball cover **10** and for reducing the weight of the ball cover **10**. It also simplifies the manufacturing process of the ball cover **10**. The weight control arrangement **30** is used for ensuring the weight of the sportsball to meet a specify requirement and for enhancing the strength of the ball bladder **20**. It also prevents the ball bladder **20** from being over-inflated. It is worth mentioning that the weight control arrangement **30** can be incorporated with different sportsballs, such as an America football or a volley ball, having the ball bladder **20** therein.

[0060] One skilled in the art will understand that the embodiment of the present invention as shown in the drawings and described above is exemplary only and not intended to be limiting.

[0061] It will thus be seen that the objects of the present invention have been fully and effectively accomplished. The embodiments have been shown and described for the purposes of illustrating the functional and structural principles of the present invention and is subject to change without departure from such principles. Therefore, this invention includes all modifications encompassed within the spirit and scope of the following claims.

1. A sportsball, which requires a specify weight requirement, comprising:

a ball cover having a spherical ball cavity, and comprising an outer cover panel, a single inner lining, and a cushioning layer integrally bonded between said outer cover panel and said inner lining, wherein said inner lining is a fabric layer knitted to have the same tension at longitu-

dinal and transverse directions to reduce a weight of said ball cover and to ensure a strength said ball cover;

an inflatable ball bladder disposed in said ball cavity of said ball cover, wherein said ball bladder has a valve stem formed thereat for inflating said ball bladder; and

a weight control arrangement, comprising a plurality of weight panels which are made of the same material of said ball bladder and are attached to said ball bladder for not only controlling a weight of said ball bladder when the weight of said ball cover is reduced but also strengthening said ball bladder to support said ball cover after said ball bladder is inflated, wherein said weight panels are selectively configured to add the weight of said inflatable ball bladder to ensure said sportsball to meet the specify weight requirement.

2. The sportsball, as recited in claim **1**, wherein said weight panels are symmetrically attached to said ball bladder to ensure said ball bladder to be inflated evenly and to ensure the weight of said ball bladder to be distributed evenly.

3. The sportsball, as recited in claim **1**, wherein said weight panels are integrally attached to an outer surface of said ball bladder.

4. The sportsball, as recited in claim **2**, wherein said weight panels are integrally attached to an outer surface of said ball bladder.

5. The sportsball, as recited in claim **1**, wherein said weight panels are adhered to an inner surface of said ball bladder.

6. The sportsball, as recited in claim **2**, wherein said weight panels are adhered to an inner surface of said ball bladder.

7. The sportsball, as recited in claim **1**, wherein said weight panels are integrally formed edge-to-edge to form an outer bladder which is integrally attached to an outer surface of said ball bladder.

8. The sportsball, as recited in claim **2**, wherein said weight panels are integrally formed edge-to-edge to form an outer bladder which is integrally attached to an outer surface of said ball bladder.

9. The sportsball, as recited in claim **4**, wherein said weight panels have the same uniform thickness, wherein said thickness of each of said weight panel is equal or smaller than a thickness of said ball bladder.

10. The sportsball, as recited in claim **6**, wherein said weight panels have the same uniform thickness, wherein said thickness of each of said weight panel is equal or smaller than a thickness of said ball bladder.

11. The sportsball, as recited in claim **8**, wherein said weight panels have the same uniform thickness, wherein said thickness of each of said weight panel is equal or smaller than a thickness of said ball bladder.

12. The sportsball, as recited in claim **9**, wherein said valve stem is extended through one of said weight panels to secure said valve stem in position.

13. The sportsball, as recited in claim **10**, wherein said valve stem is extended through one of said weight panels to secure said valve stem in position.

14. The sportsball, as recited in claim **11**, wherein said valve stem is extended through one of said weight panels to secure said valve stem in position.

15. The sportsball, as recited in claim **12**, wherein each of said weight panels has an elliptical shape.

16. The sportsball, as recited in claim **13**, wherein each of said weight panels has an elliptical shape.

17. The sportsball, as recited in claim **14**, wherein each of said weight panels has an elliptical shape.

18. A method of manufacturing a sportsball, which requires a specify weight requirement, comprising the steps of:

(a) forming a ball cover having a spherical ball cavity, wherein said ball cover is formed by the steps of:

(a.1) forming an outer cover panel, a single inner lining, and a cushioning laver, wherein said inner lining is a fabric layer knitted to have the same tension at longitudinal and transverse directions so as to reduce a weight of said ball cover and to ensure a strength said ball cover; and

(a.2) integrally bonding said cushioning layer between said outer cover panel and said inner lining to form said ball cover;

(b) forming an inflatable ball bladder which has a valve stem formed thereat;

(c) forming a plurality of weight panels which are made of the same material of said ball bladder;

(d) symmetrically attaching said weight panels to said ball bladder for not only controlling a weight of said ball bladder when the weight of said ball cover is reduced but also strengthening said ball bladder to prevent said ball cover being over-inflated, wherein said weight panels are selectively configured to add the weight of said inflatable ball bladder to ensure said sportsball to meet the specify weight requirement; and

(e) disposing said ball bladder with said weight panels in said ball cavity of said ball cover to support said ball cover after said ball bladder is inflated.

19. The method as recited in claim **18** wherein, in the step (d), said weight panels are integrally attached to an outer surface of said ball bladder.

20. The method as recited in claim **18** wherein, in the step (d), said weight panels are adhered to an inner surface of said ball bladder.

21. The method as recited in claim **18** wherein, in the step (d), said weight panels are integrally formed edge-to-edge to form an outer bladder which is integrally attached to an outer surface of said ball bladder.

22. The method as recited in claim **18** wherein, in the step (c), said weight panels are formed to have the same uniform thickness, wherein said thickness of each of said weight panel is equal or smaller than a thickness of said ball bladder.

23. The method as recited in claim **18** wherein, in the step (d), said valve stem is extended through one of said weight panels to secure said valve stem in position.

24. The method, as recited in claim **18**, wherein each of said weight panels has an elliptical shape.

* * * * *