(19) Europäisches Patentamt
European Patent Office
Office européen des brevets

(11) Publication number: **0 600 584 A1**

(12) EUROPEAN PATENT APPLICATION

(21) Application number: **93307244.9**

(22) Date of filing: **14.09.93**

(51) Int. Cl.[5]: **A63B 71/08**, A63B 71/12

(30) Priority: **30.11.92 CN 92242588 U**

(43) Date of publication of application:
08.06.94 Bulletin 94/23

(84) Designated Contracting States:
AT BE CH DE DK ES FR GB GR IE IT LI LU MC NL PT SE

(71) Applicant: **COMAX SPORTING GOODS CO. LTD.**
9F No: 34,
Fu-Hsing S Road,
Section 1
Taipei(TW)

(72) Inventor: **Yen, Fu-Hsin**
2nd Floor, No. 7, Lane 25, Chang-An Street
Pan-Chau City, Taipei, Hsien Taipei(TW)

(74) Representative: **Deans, Michael John Percy et al**
Lloyd Wise, Tregear & CO.
Norman House
105-109 Strand
London WC2R OAE (GB)

(54) Body part protector.

(57) A body part protector has a pad (20), and a board (40) having a generally arcuate cross-section with a fastening strap or string. Between the pad and the board is a buffer structure in the form of a buffer web (50) attached to the board (40) with a buffer spacing between the web and the board.

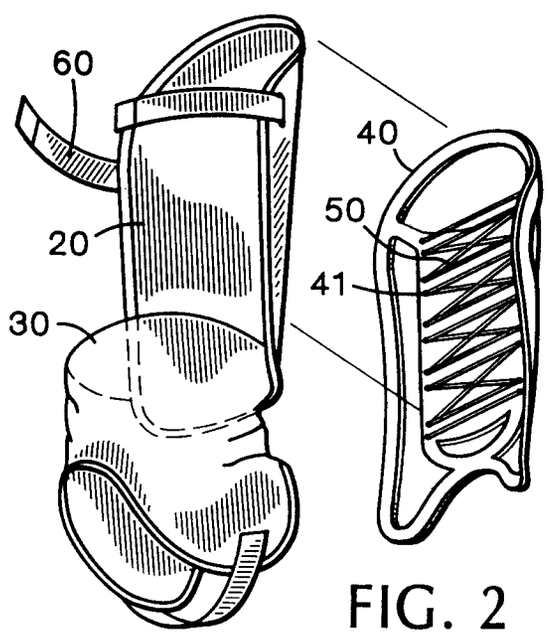

FIG. 2

EP 0 600 584 A1

The present invention relates to a body part protector.

Sports have become a widely accepted activity. Sports, such as football, hockey, and baseball, require use of many parts of the body. The shin, elbow, wrist, ankle, hip, shoulder, knee, and thigh, for example, are thus susceptible to damage by the impact of the external forces. Sports regulations typically require the player to wear appropriate body part protectors to reduce injuries, to lower the chances of wounds and to generally safeguard the player.

As shown in Fig. 1, a previously proposed protector for the shin (or elbow) includes a shin pad 11, ankle sleeve 12, plastic hardboard 13, and a string 14. Shin pad 11 is a soft matrix or a matrix filled with sponge. Ankle sleeve 12 is connected at the lower end of shin pad 11, and plastic hardboard 13 is fixed to the back of the shin pad 11 to resist external impact. Although the plastic hardboard 13 can resist external impact force, the shin pad is soft. Therefore, an external force which impacts the hardboard is transferred by the hardboard directly onto the shin. Also, the arc shape of the surface of the hardboard (which allows it to fit closely to the shin) causes the impacting force to extend and concentrate from the central peak of the arc to the edges. This may cause harm to the shin and raises the probability of a wound.

The present invention has arisen from our work in seeking to improve body part protectors to offer an optimum elastic buffer effect with the aim to reduce the effect of external impact forces and safely to protect the body part.

In accordance with the present invention, there is provided a body part protector having a pad, and a board having a generally arcuate cross-section provided with a fastening strap or string, characterized in that a buffer structure is provided between the pad and the board in the form of a buffer web attached to the board with a buffer spacing between the web and the board.

Preferred embodiments of our body part protectors include one or more of the following features:

The buffer web is elastic, lies in a plane, and is formed by threads attached to the board.

The board is rigid.

The buffer web may be a plastic material formed as a unit with the board, or a separately formed piece sewn to the board.

The pad, the board, and the web are configured to protect one of the following body parts: shin, knee, ankle, elbow, shoulder, hip, thigh, or forearm/hand.

The invention is hereinafter more particularly described by way of example only with reference to the accompanying drawings, in which:-

Fig. 1 is an exploded perspective view of a previously proposed shin/ankle protector;

Fig. 2 is an exploded perspective view of a shin/ankle protector constructed in accordance with the present invention;

Fig. 3 is a cross-sectional view of the shin/ankle protector of Fig. 2;

Fig. 4 is a cross-sectional view of the shin/ankle protector of Figs. 2 and 3 attached to a leg;

Fig. 5 is an exploded perspective view of another embodiment of shin/ankle protector also constructed in accordance with the present invention;

Fig. 6 is an exploded perspective view of a knee protector constructed in accordance with the present invention; and

Figs. 7 to 12 are perspective views of knee, thigh, forearm/hand, elbow, shoulder, and hip protectors, respectively, all constructed in accordance with the present invention.

As shown in Figs. 2 and 3, our shin/ankle protector includes shin pad 20, ankle sleeve 30, hardboard body 40, and buffer web 50 as well as string 60. Shin pad 20 is a soft matrix. Ankle sleeve 30 is connected at the lower end of shin pad 20; sleeve 30 is sleeved onto the ankle of the human leg. String 60 is attached to the shin pad 20 and used to string the shin/ankle protector onto the shin. Hardboard body 40, an arc-shaped plastic board, is connected onto the outside face of the shin pad 20. The two sides of the plastic board are symmetrically arranged and have two rows of stringing holes 41.

Buffer web 50 is made of the nylon threads strung through holes 41 of hardboard 40 to form a web. The plane of the web 49 is separated from the plane of the board 51 by a spacing 501.

In Fig. 4, the structure places the buffer web 50 between the shin pad 20 and hardboard 40. Hardboard 40 has good impact resistance and can resist much of the impact F. The soft shin pad 20 comfortably conforms to the contour of the shin 80 of the human leg. The buffer web 50 provides an excellent elastic buffer effect. When the external force F impacts hardboard 40, the impact force, even though originally focused on one point, is distributed to the two sides of hardboard 40 and stretches the buffer web as a result of the placement of the buffer web 50 and the buffer spacing 501. Thus the external force is distributed uniformly on the buffer web. Further, as the buffer web then has a tendency to wrap around the shin, the external force are effectively reduced and released while the shin experiences but a light indirect shock. In this way, when any position or part of the protector receives an impact, the nylon thread on the holes 41 near the impacted positions will draw the neighboring nylon string to adjust the tightness or loose-

ness of the entire impact face so that the impact force will uniformly distribute over the entire area of the web, and the applied force will be shared, leading to a smaller harmful effect. Thus the protector has an extremely good elastic buffer effect, greatly reducing the impact of the external force onto the shin and providing excellent protection.

Fig. 5 shows another embodiment. The buffer web 50 can be directly formed as a unit with the hardboard 40 by injection molding; this simplifies the manufacturing, reducing costs. Of course, it is also possible to form buffer web 50 as a separate piece and then to sew it onto hardboard 40; the same elastic buffer effect is achieved.

Other embodiments are also within the scope of the invention.

For example, in Fig. 6, in a knee protector, the hardboard 92 is cup shaped and the buffer web 94 is strong on string holes arranged in a circle. Other shapes and configurations may be used for protection of other body parts as seen in Figs. 7 to 12.

Claims

1. A body part protector having a pad, and a board having a generally arcuate cross-section provided with a fastening strap or string, characterized in that a buffer structure is provided between the pad and the board in the form of a buffer web attached to the board with a buffer spacing between the web and the board.

2. A body part protector according to Claim 1, further characterized in that the buffer web is elastic.

3. A body part protector according to Claims 1 or 2, further characterized in that the buffer web lies in a plane.

4. A body part protector according to any preceding claim, further characterized in that the board is rigid.

5. A body part protector according to any preceding claim, further characterized in that the buffer web is formed by threads attached to the board.

6. A body part protector according to any preceding claim, further characterized in that the buffer web comprises a plastic material formed as a unit with the board.

7. A body part protector according to any of Claims 1 to 4, further characterized in that the buffer web comprises a separately formed piece sewn to the board.

8. A body part protector according to any preceding claim, further characterized in that each of the pad, the board, and the web are configured so that said body part is specifically adapted to protect one of the shin, knee, ankle, elbow, shoulder, hip, thigh, or forearm/hand.

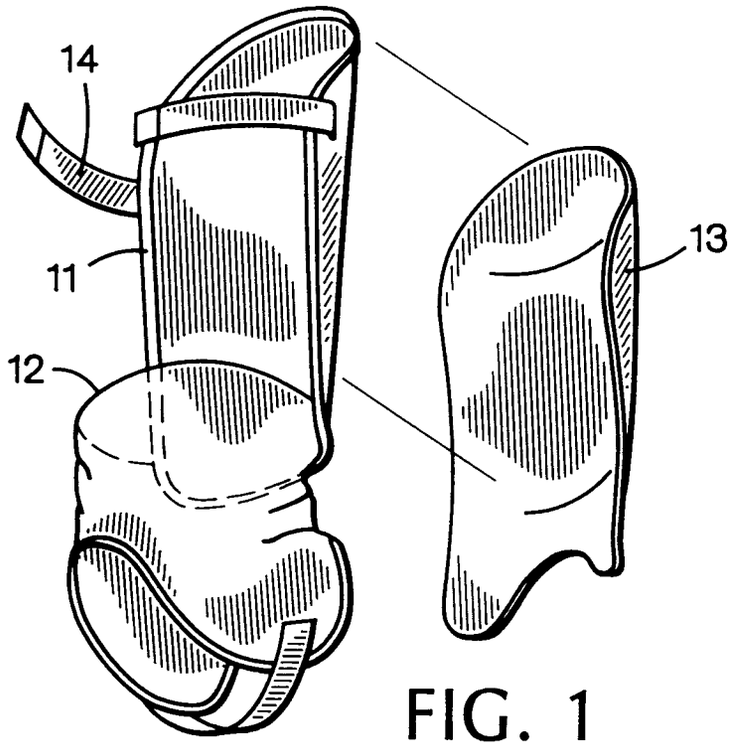

FIG. 1

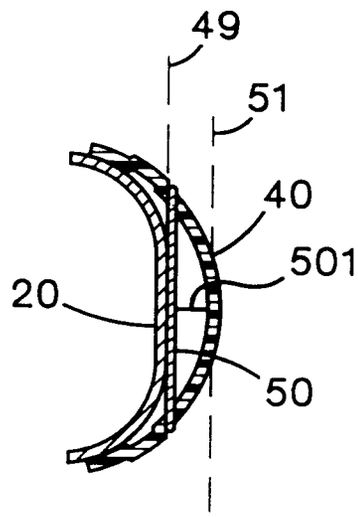

FIG. 3

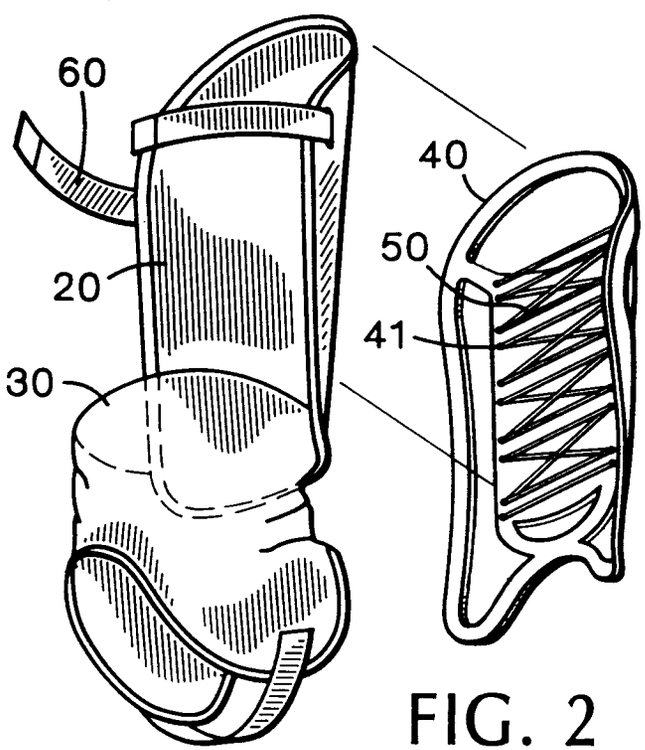

FIG. 2

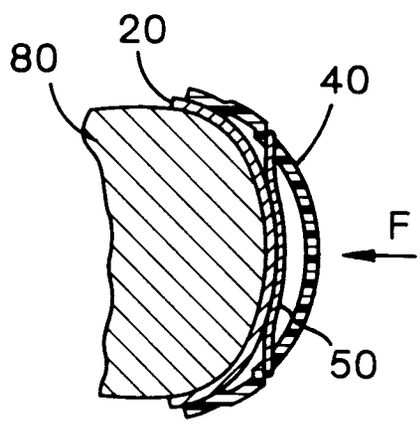

FIG. 4

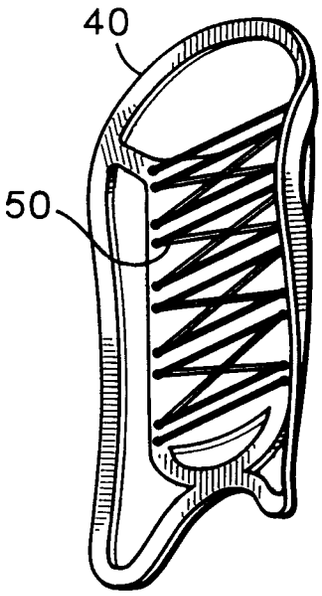

FIG. 5

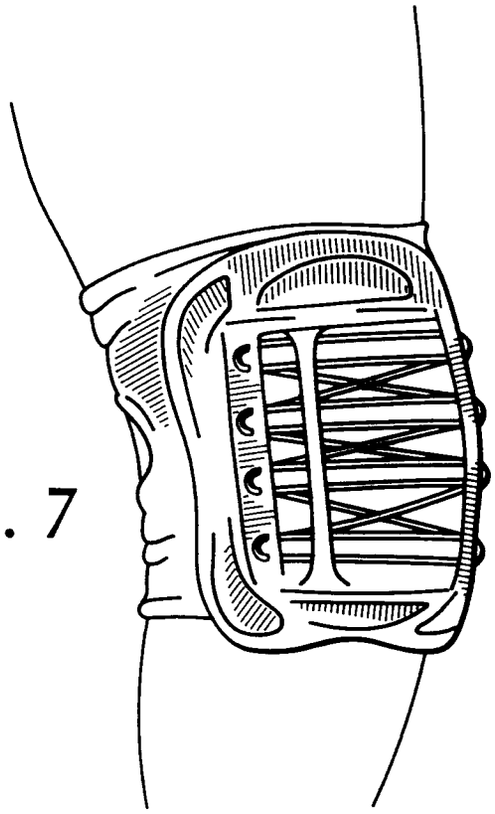

FIG. 7

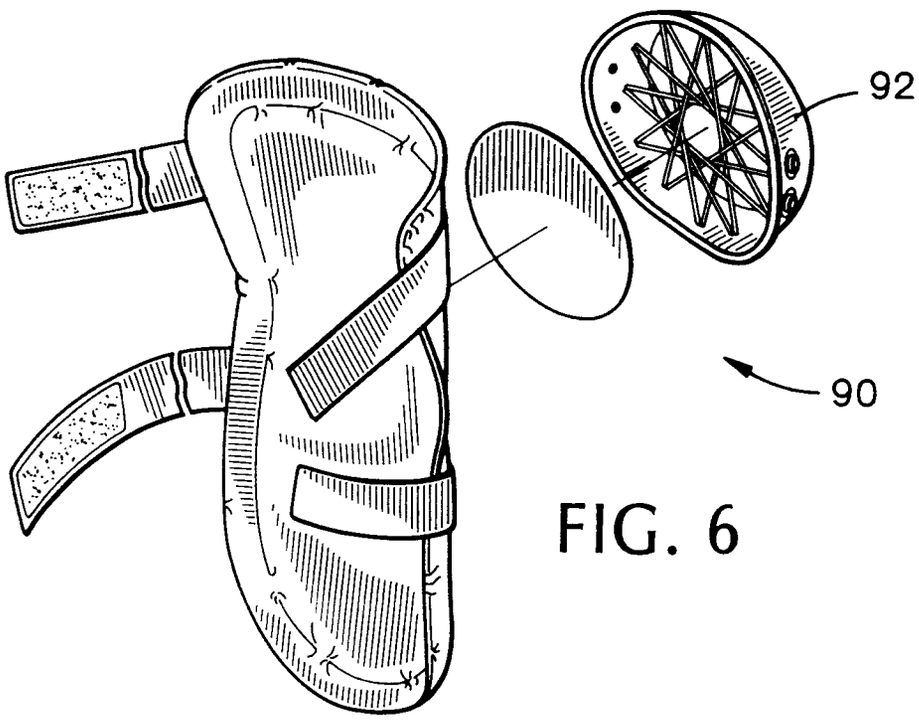

FIG. 6

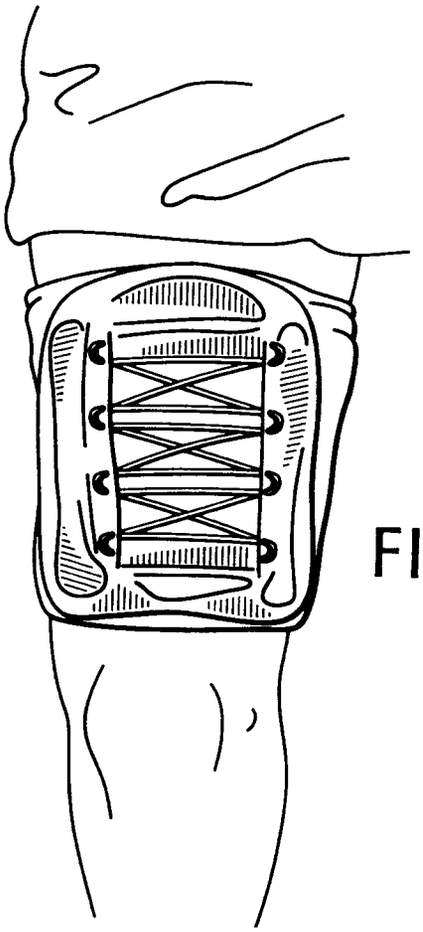

FIG. 8

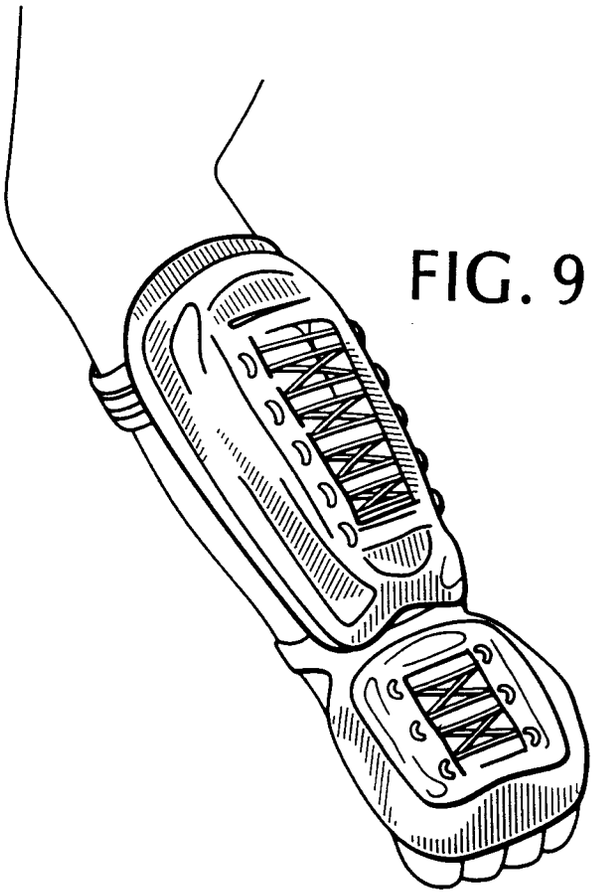

FIG. 9

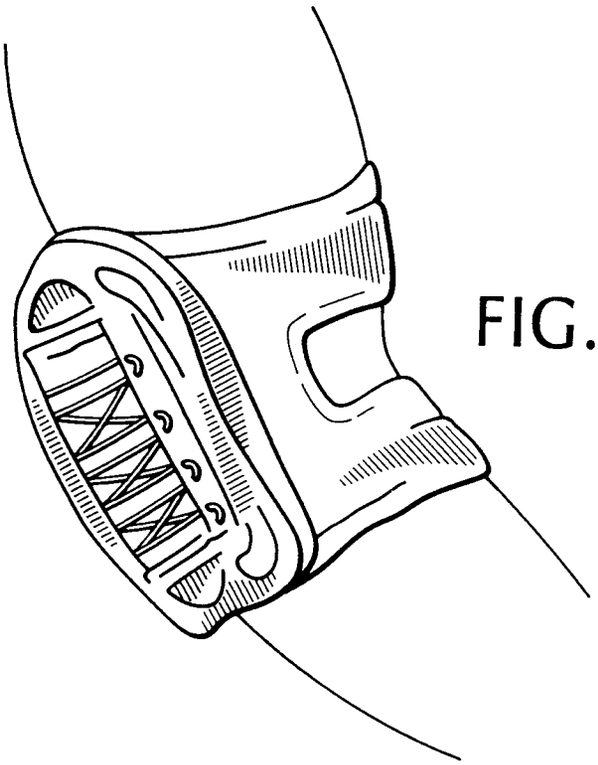

FIG. 10

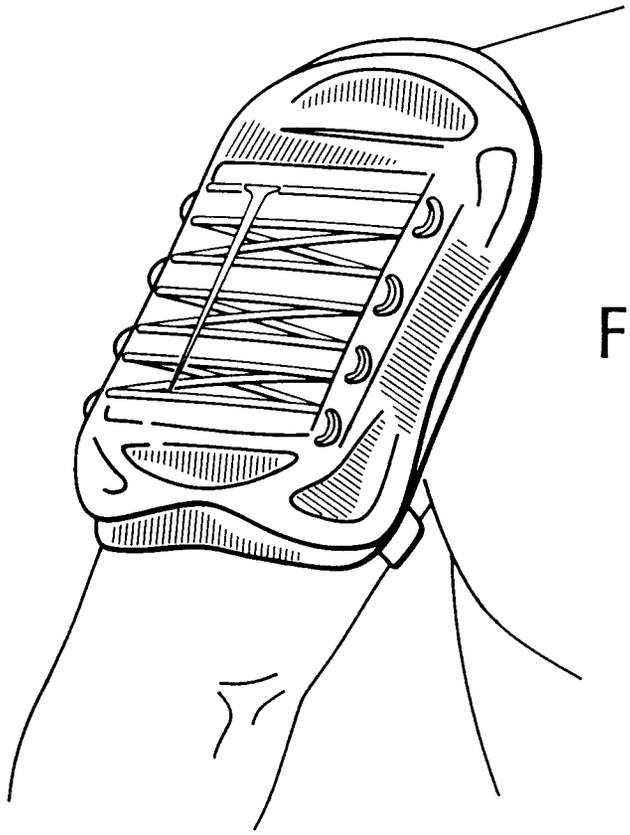

FIG. 11

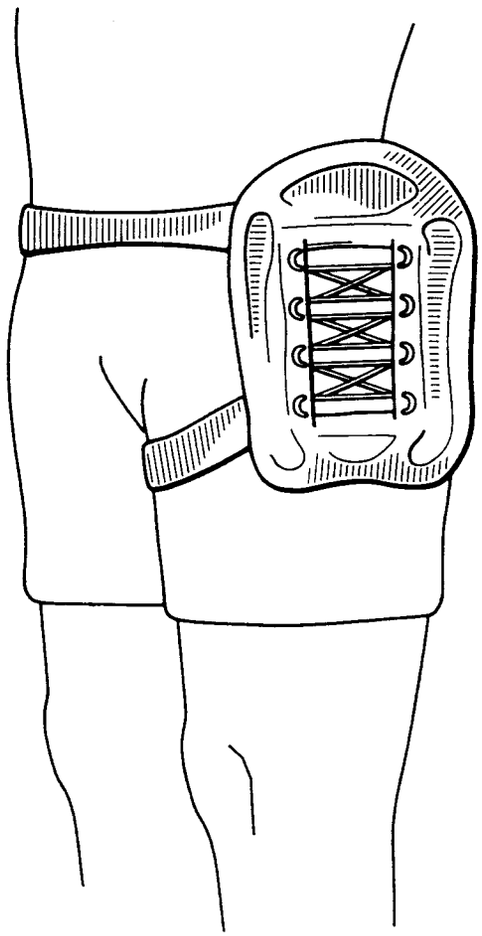

FIG. 12

European Patent Office

EUROPEAN SEARCH REPORT

Application Number
EP 93 30 7244

DOCUMENTS CONSIDERED TO BE RELEVANT

Category	Citation of document with indication, where appropriate, of relevant passages	Relevant to claim	CLASSIFICATION OF THE APPLICATION (Int.Cl.5)
X	US-A-1 744 384 (C. C. HOOD) * the whole document * ---	1,3,4,7,8	A63B71/08 A63B71/12
X	US-A-2 338 424 (V. GIARDINI) * the whole document * ---	1,2,4,8	
Y	US-A-1 689 558 (J. PATTEN) * the whole document * ---	1,8	
Y	GB-A-602 645 (A. GOSLING) * the whole document * ---	1,8	
A	DE-A-548 786 (J. C. PATTEN) * the whole document * ---	1,2,4	
A	US-A-1 784 148 (D. LEVINSON) * the whole document * ---	1,4	
A	US-A-1 772 922 (CH. R. VOLZ) * the whole document * -----	1,8	

TECHNICAL FIELDS SEARCHED (Int.Cl.5)

A41D
A63B

The present search report has been drawn up for all claims

Place of search	Date of completion of the search	Examiner
THE HAGUE	3 March 1994	Garnier, F

CATEGORY OF CITED DOCUMENTS

X : particularly relevant if taken alone
Y : particularly relevant if combined with another document of the same category
A : technological background
O : non-written disclosure
P : intermediate document

T : theory or principle underlying the invention
E : earlier patent document, but published on, or after the filing date
D : document cited in the application
L : document cited for other reasons

& : member of the same patent family, corresponding document